WILLIAMS

16-3020-101-U
April 30, 1985

I N F E R N O ®

SERVICE MANUAL
FOR FACTORY-ASSEMBLED GAMES

For service...

Call your authorized
WILLIAMS distributor

WILLIAMS
Electronics, Inc.
3401 N. California Ave.
Chicago, IL 60618

ROM SUMMARY

ROM	PART NO.	DESCRIPTION	IC NO.	BOARD	INDICATION
Sound ROM	A-5343-10822	2764 PROM, 8Kx8	IC8	CPU	no sound
INFERNO 2	A-5343-10823	2732 PROM, 4Kx8	IC9	CPU	209
INFERNO 3	A-5343-10824	2732 PROM, 4Kx8	IC10	CPU	210
INFERNO 4	A-5343-10825	2764 PROM, 8Kx8	IC11	CPU	211
INFERNO 5	A-5343-10826	2764 PROM, 8Kx8	IC12	CPU	212
INFERNO 6	A-5343-10827	2764 PROM, 8Kx8	IC13	CPU	213
INFERNO 7	A-5343-10828	2764 PROM, 8Kx8	IC14	CPU	214
INFERNO 8	A-5343-10829	2764 PROM, 8Kx8	IC15	CPU	215
INFERNO 9	A-5343-10830	2764 PROM, 8Kx8	IC16	CPU	216
INFERNO 10	A-5343-10831	2764 PROM, 8Kx8	IC17	CPU	217
INFERNO 11	A-5343-10832	2764 PROM, 8Kx8	IC18	CPU	218
INFERNO 12	A-5343-10833	2764 PROM, 8Kx8	IC19	CPU	219
Not Used	--	2764 PROM, 8Kx8	IC20	CPU	220
INFERNO 13	A-5343-10834	2764 PROM, 8Kx8	IC21	CPU	221
Not Used	--	2764 PROM, 8Kx8	IC22	CPU	222
INFERNO 14	A-5343-10835	2764 PROM, 8Kx8	IC23	CPU	223
Not Used	--	2764 PROM, 8Kx8	IC24	CPU	224
INFERNO 15	A-5343-10836	2764 PROM, 8Kx8	IC25	CPU	225
Not Used	--	2764 PROM, 8Kx8	IC26	CPU	226
Special Chip 2	A-5410-10083	Special Chip	IC29	CPU	--
Special Chip 2	A-5410-10083	Special Chip	IC30	CPU	--
Clock-ROM 1	A-5282-10295	82S123 ROM, 32x8	IC14	VIDEO	no video
INFERNO 16	A-5343-10837	2764 PROM, 8Kx8	IC41	VIDEO	vert lines
Horiz-sync ROM 1	A-5282-10294	82S129 ROM, 256x4	IC47	VIDEO	--
INFERNO 17	A-5343-10838	2764 PROM, 8Kx8	IC57	VIDEO	vert lines
INFERNO 18	A-5343-10739	2764 ROM, 8Kx8	IC58	VIDEO	vert lines
Decoder-ROM 5A (Horizontal)	A-5282-10292	6349 ROM, 512x8	IC60	VIDEO	--

CPU-BOARD JUMPERS: W1, W3, W5, W7, W10, W11, W14, W16 and W18.

NOTICE

TO ORDER REPLACEMENT ROMS from your authorized WILLIAMS distributor, specify (1) part number shown above, (2) ROM-label color, (3) REV level (number) on the label, and (4) which game the ROM is used in.

Contents

ROM Summary	2
Examine your Game	4
Control Locations	4
Game Setup	4
Game Operation	5
Bookkeeping Totals	6
Exclusive Game Adjustments	7
Adjustments: Step-By-Step	8
Game Pricing	10
Your Game's Diagnostic Mode	10
Built-In Test Procedures	11
Sound Self-Test	13
A Word About Troubleshooting	14
Main-Harness Color Code	15
Warnings & Notices	17
Parts List	17

Examine your Game

[ ]INSPECT THE OUTSIDE of the carton or game cabinet for shipping damage.

[ ]UNLOCK AND OPEN the bottom-rear door. Now check circuitry.

[ ]ARE CONNECTORS SECURELY ATTACHED? Reconnect any found loose. DON'T FORCE CONNECTORS. They're keyed and only fit one way.

[ ]ARE PLUG-IN CHIPS FIRMLY SEATED in their sockets?

[ ]UNWRAP THE POWER CORD coiled inside the cabinet. DON'T PLUG IT IN YET!

[ ]SCRUTINIZE MAJOR SUBASSEMBLIES, such as the monitor, control panel, transformer chassis and power supply. Make sure they're securely-mounted.

[ ]UNDO THE CONTROL-PANEL LATCHES. You can reach these two from the coin door by extending your arm upward and to either side. Now check connectors and circuitry as above.

Control Locations

[ ]THE ON-OFF SWITCH is on the top right.

[ ]THE POWER-INTERLOCK SWITCH is behind the top-right corner of the back upper door. The interlock switch is a spring-loaded DPDT type that will turn off the game when you remove the panel. For servicing purposes, pull the switch out and the game will power up.

[ ]THE VOLUME-CONTROL is inside the coin-door and to your right.

[ ]THREE DIAGNOSTIC SWITCHES are mounted together on a bracket behind the coin door. These switches are used to access the Diagnostic-Mode Tests, the BOOKKEEPING TOTALS screen and the GAME ADJUSTMENTS screen.

[ ]THE MEMORY-PROTECT INTERLOCK SWITCH is behind the coin door. This switch must be open when you clear BOOKKEEPING TOTALS or make GAME ADJUSTMENTS. It automatically opens when the coin door is open.

[ ]THE CPU-BOARD RESET SWITCH is on the CPU board near the batteries.

[ ]THE CASHBOX ADVANCE SWITCH found inside the cashbox door allows bookkeeping information to be audited without permitting it to be zeroed.

[ ]THE SOUND DIAGNOSTIC SWITCH is on the CPU board near the small heatsink. Refer to Sound Self-Test for information on its use.

Game Setup

WHEN THE GAME IS FIRST TURNED ON general illumination should light. A moment later the scanning "rug pattern" indicating RAM test should appear on the screen.

This will be followed by ROM test: The CPU board is depicted on the CRT. Each ROM chip is shown. As test results are determined, the ROMs turn green if they're good or red if they're bad.

IN A CORRECTLY-RUNNING GAME tests will be followed by the message "INITIAL TESTS INDICATE ALL SYSTEMS GO." If failure messages come up on the screen instead, refer to Built-In Test Procedures.

DEMAGNETIZE THE GAME with a television degaussing-coil. Besides the monitor, remember to degauss large steel parts (for example, the back-door hinge). Do this as a daily procedure. Otherwise residual magnetism may cause color impurities that adversely affect your collections.

Game Operation

STARTING YOUR GAME

INSERT COINS. The game allocates an adjustable number of credits per coin and displays this number on the CRT. Factory settings are one credit per quarter. At factory settings, when two credits are displayed, pressing 2-PLAYER START initiates a two-player game. In two-player games, both players are up at once.

PLAYER CONTROLS

MOVE in any direction by manipulating joystick.

FIRE Hold trigger for continuously fire on powergrip.

PLAYING THE GAME

LASER AT THE READY, the player defends highlands and lowlands alike from the greedy cyclopes Dohrt, Zohrt and Mohrt (500, 700 and 900 points, respectively). But even a direct hit isn't a victory in this game!

DEAD CYCLOPES TELL TALES, and the player must tag their souls before they do! A cyclops' soul is good for points, in an indirect way. Here's the trick... Players use the soul to liberate a nymph. (Nymphs of course, are trapped in statues by the cyclopes.) Once free, nymphs flit across the screen with such attraction that all the cyclopes freeze in position...making them easy marks for our hero!

MEANWHILE THE WILY CYCLOPES employ the highest of tech in their stealthy attacks. The player must beware of the crawling tankovs and the hovering boom birds!

WISE PLAYERS learn two tricks: (1) They can always escape the onrushing enemy by stepping onto the launchpad. (2) If they follow the enemy into the lizard's mouth, they enter the netherworld of the dead. There if they dare, they can achieve even more points by fighting with souls!

BUY-IN FEATURE. If during a two-player game, only one of the two players uses up all his lives he can "buy in" or continue where he left off. Continued games are more challenging than original games. So continued games tend to involve skilled players at the level they prefer and to increase collections. To buy in, a player inserts his next coin while "CONTINUE GAME" appears on the screen. Then he pushes either of the start buttons.

Bookkeeping Totals

BOOKKEEPING TOTALS SHOW YOU AT A GLANCE if game settings are bringing you a satisfactory return on your investment! Only games by WILLIAMS ELECTRONICS have this feature. Think of it as a unique way to keep your INFERNO game the leader of the pack when it comes to earnings...location after location, week in and week out!

Diagnostic Button-Switches

ENTERING BOOKKEEPING MODE. Inside the coin door you've installed a bracket with three button-switches. It'll make bookkeeping a snap! Set the AUTO-UP/MANUAL-DOWN (center) switch to AUTO-UP. Press the ADVANCE switch to display BOOKKEEPING TOTALS on the screen. Now check those totals. Here's what to look for...

BOOKKEEPING TOTALS

LEFT SLOT COINS	432
CENTER SLOT COINS	0
RIGHT SLOT COINS	398
PAID CREDITS	830
FREE MEN	226
TOTAL TIME IN MINUTES	34:28
TOTAL MEN PLAYED	689
TOTAL SINGLE PLAYER	548
TOTAL DUAL PLAYER	141
TOTAL BUY-IN	51
TOTAL CREDITS PLAYED	830
AVERAGE TIME PER GAME	2:00

Bookkeeping screen

AVERAGE TIME PER GAME: TWO MINUTES. Your most important figure on the BOOKKEEPING TOTALS screen is AVERAGE TIME PER GAME. You'll want to pay special attention to this figure every day for this reason: Thorough field and factory research has shown that two-minute games both satisfy players and also keep the quarters flowing.

If games aren't running about two minutes long, then collections probably aren't at their peak. You'll want to tailor your game to your game-playing public. It's easy. But only WILLIAMS games let you do it!

GAME ADJUSTMENTS

EXTRA LIFE EVERY	50000
MEN FOR 1 CREDIT GAME	5
HIGH SCORE TO DATE ALLOWED	YES
PRICING SELECTION	3
LEFT SLOT UNITS	1
CENTER SLOT UNITS	4
RIGHT SLOT UNITS	1
UNITS REQUIRED FOR CREDIT	1
UNITS REQUIRED FOR BONUS CREDIT	0
MINIMUM UNITS FOR ANY CREDIT	0
DIFFICULTY OF PLAY	5
LETTERS FOR HIGHEST SCORE	3
ALLOW 2-PLAYER BUY-IN	YES
RESTORE FACTORY SETTINGS	NO
CLEAR BOOKKEEPING TOTALS	NO
HIGH SCORE TABLE RESET	NO
AUTO CYCLE	NO
SET ATTRACT MODE MESSAGE	NO
SET HIGHEST SCORE NAME	NO

USE 'MOVE' TO SELECT ADJUSTMENT
USE 'FIRE' TO CHANGE THE VALUE

PRESS ADVANCE TO EXIT

Adjustments Screen Showing Factory Settings

Exclusive Game Adjustments

1. Inside the coin door is a bracket with three button switches. Set the AUTO-UP/MANUAL-DOWN (center) switch to AUTO-UP.
2. Press the ADVANCE switch twice. The GAME ADJUSTMENTS screen will come up.
3. Use the MOVE joystick to choose an adjustment.
4. Use the FIRE joystick to alter an adjustment.

Now for the multiple-choice section! Choose one or more:

[ ] For a shorter game, increase the bonus-point figure (EXTRA LIFE EVERY) or set it to zero. For a longer game, reduce it. (50,000 = long/200,000 = short).

[ ] For a shorter game, decrease the number of MEN FOR 1 CREDIT GAME. For a longer game, increase the number. (1 = short/20 = long).

[ ] DIFFICULTY OF PLAY is adjustable over a broad range. Use FIRE to choose the appropriate level (0 = easiest or extra liberal, 5 = average, 9 = hardest or extra conservative).

[ ] Select game pricing with standard or custom settings. See the Pricing Table.

LETTERS FOR HIGHEST SCORE

The highest-scoring player is allowed an adjustable number of letters for his initials. You can vary this number from 3 to 20 letters (3 recommended). If players enter objectionable words, you can change the words without deleting the scores. See SET HIGHEST-SCORE NAME.

HIGH SCORE TO DATE ALLOWED
1. Use MOVE to highlight HIGH SCORE TO DATE ALLOWED.
2. Move FIRE.
3. Press ADVANCE to enter Game-Over Mode.

ALLOW 2-PLAYER BUY-IN
1. Use MOVE to highlight ALLOW 2-PLAYER BUY-IN.
2. Move FIRE.
3. Press ADVANCE to enter Game-Over Mode.

RESTORE FACTORY SETTINGS
1. Use MOVE to highlight RESTORE FACTORY SETTINGS.
2. Move FIRE.
3. Press ADVANCE to twice.

CLEAR BOOKKEEPING TOTALS
1. Use MOVE to highlight CLEAR BOOKKEEPING TOTALS.
2. Move FIRE.
3. Press ADVANCE to enter Game-Over Mode.

HIGH-SCORE TABLE RESET
1. Use MOVE to highlight HIGH SCORE TABLE RESET.
2. Move FIRE.
3. Press ADVANCE to enter Game-Over Mode.

AUTO CYCLE
This adjustment is actually a set of tests. See Diagnostic-Mode Tests.

1. Use MOVE to highlight AUTO CYCLE.
2. Move FIRE to display a "YES"
3. Press ADVANCE to enter Auto-Cycle Mode. The coin door must remain open for this test.
4. To exit Auto-Cycle Mode, turn the game off and on.

SET ATTRACT-MODE MESSAGE
1. Use MOVE to highlight SET ATTRACT MODE MESSAGE.
2. Move FIRE.
3. Press ADVANCE.
4. Enter up to two lines of your message by following instructions on the screen.
5. Press ADVANCE to enter Game-Over Mode.

To restore the WILLIAMS attract-mode message, perform steps 1 through 3 and them turn the game off and back on.

SET HIGHEST SCORE NAME

1. Use MOVE to highlight SET HIGHEST SCORE NAME.
2. Move FIRE.
3. Press ADVANCE.
4. Enter the new signature.
5. Press ADVANCE to enter Game-Over Mode.

A simpler method enters the factory highest-score signature. In the Game-Over Mode hold down the HIGH SCORE RESET button. After a few seconds a sound is produced and the factory signature is activated.

Pricing Table

*indicates standard settings by adjusting only PRICING SELECTION

Coin-Door Mechanism	Games/Price	Pricing Selection	Left Slot Units	Center Slot Units	Right Slot Units	Units Req'd For Credit	Units Req'd For Bonus Credit	Min. Units For Any Credit
Twin Quarter	*1/25¢, 4/$1	3	1	4	1	1	0	0
or	*1/50¢, 2/$1	5	1	4	1	2	0	0
Quarter,	1/50¢, 2/75¢, 3/4x25¢	0	3	15	3	4	15	0
Dollar,	2/25¢, 8/$1	0	2	8	2	1	0	0
Quarter	1/25¢, 3/50¢, 6/$1	0	1	4	1	1	2	0
	1/25¢, 5/$1	0	1	4	1	1	4	0
(USA & Canada)	*1/50¢, 3/$1	0	1	4	1	2	4	0
1DM, 5DM	2/1DM, 12/5DM	0	12	0	2	2	0	0
(West Germany)	*1/1DM, 6/5DM	2	6	0	1	1	0	0
1F, 5F, 10F	1/3x1F, 2/5F, 5/10F	0	2	10	20	5	20	0
(France)								
25-Cent,	*1/25¢, 4/1G	6	1	0	4	1	0	0
1 Guilder	1/25¢, 5/1G	0	1	0	5	1	0	0
(Netherlands)								
5 Franc,	*1/5F, 2/10F	7	1	0	2	1	0	0
10 Franc	*1/10F	8	1	0	2	2	0	0
(Belgium)								
1F, 2F	1/1F, 3/2F	0	3	0	6	2	0	0
(Switzerland)								
Twin 100-Yen	*2/100Y	5	1	4	1	2	0	0
(Japan)								
Twin 100L	*1/200 Lire	5	1	4	1	2	0	0
(Italy)								
20¢, $1	1/40¢, 3/$1	0	1	0	6	2	0	0
(Australia)								
10P, 50P (UK)	1/10P, 5/50P	0	1	5	1	1	0	0
Twin Coin	*1/1 Coin	3	1	4	1	1	0	0
	*1/2 Coins	5	1	4	1	2	0	0
	1/4 Coins	0	1	4	1	4	0	0
	*1/2 Coins, 3/4 Coins	1	1	4	1	2	4	0
	1/3 Coins, 2/5 Coins	0	2	0	2	5	0	0
	*1/2, 3/5	4	1	16	6	2	0	0
1-Unit,	1/1, 5/5	0	1	0	5	1	0	0
5-Unit	1/3, 2/5	0	2	0	10	5	0	0
Any	*Free Play	9	0	0	0	0	0	0

Game Pricing

PRICING SELECTION allows a shorthand method of setting the pricing functions. If a number from one to nine is entered into the PRICING SELECTION function, a corresponding standard setting (shown in the pricing table above) will be entered into the game. The rest of the pricing functions are automatically set for that standard.

FOR CUSTOM SETTINGS first set PRICING SELECTION to zero. Then set the remaining values according to the Pricing Table.

THE GAMES : PRICE RATIO is equivalent to the ratio X : VC, where:
X = SLOT UNITS
V = COIN VALUE
C = UNITS REQUIRED FOR CREDIT

For example at factory settings with quarter chutes the variables produce 1 : 25x1 or one game for a quarter.

UNITS REQUIRED FOR BONUS CREDIT is the number of games that must be purchased before a free game is awarded. The factory setting for this function is 0. This 0 means that the BONUS-CREDIT feature is disabled.

MINIMUM UNITS FOR ANY CREDIT determines the number of games that must be purchased before play may begin. The factory setting for this function is 0. This 0 means that the MINIMUM-UNITS feature is disabled.

Your Game's Diagnostic-Mode

SET THE AUTO-UP MANUAL-DOWN SWITCH to the MANUAL-DOWN position and press ADVANCE. The game is now in its Diagnostic Mode and a ROM test is performed. With ROM test results present on the CRT display, set the AUTO-UP/MANUAL-DOWN switch to the AUTO-UP position. Enter subsequent tests by pressing ADVANCE once more for each test. After the last test, Game-Over Mode commences.

AUTO-CYCLE MODE permits continuous ROM, RAM and CMOS RAM tests to detect failures that only appear after numerous checksum comparisons. If an error is detected Auto-Cycle Mode is aborted and a failure message appears on the CRT.

1. Open the coin door. It must remain open for AUTO CYCLE.
2. Display GAME ADJUSTMENTS.
3. Move down to AUTO CYCLE.
4. Display YES.
5. Press ADVANCE.
6. To enter Game-Over Mode turn the game off and on.

Built-In Test Procedures

POWER-UP TESTS

* SCREEN-RAM TEST. A rug pattern scans across the screen. Screen RAMS (dynamic type) are tested in the following manner... The CPU-board LED-display signals a bad RAM with an error code between 100 and 199 (eg., 1-2-1. The code numbers appear one at a time). A code 198 indicates RAM 98, and a code 199 indicates RAM 99. The rest of the RAMs (chips 100 to 121) are indicated by their chip numbers.

  Screen RAMs are located on the video board. If you suspect a RAM error, check all three DC power-voltages on the RAM indicated: -5/pin 1, +12/pin 8, +5/pin 9. None of these should have more than a few millivolts of AC on it. Never replace a RAM chip until you prove that these voltages are normal!

* ADDITIONAL RAM TESTS. Power-Up Tests include separate tests for seven more RAMs. On the video board, the background RAM U40 and four color-RAMs U75, U76, U77 and U78 are checked. Two CPU-board RAMs (U54 and U55) are also tested. Details follow...

RAM	DESCRIPTION	IC NO.	BOARD	ERROR CODE
background	TC5516AP or 2016, 2Kx8	40	video	440
color RAM	2148 or 2149, 1kx4	75	video	575
color RAM	2148 or 2149, 1kx4	76	video	576
color RAM	2148 or 2149, 1kx4	77	video	577
color RAM	2148 or 2149, 1kx4	78	video	578
static RAM	6810, 128x8	7	CPU	none
static RAM	6116, 2kx8	54	CPU	654
static RAM	6116, 2kx8	55	CPU	655

* ROM TEST. The CPU board is depicted on the CRT. Each ROM chip is shown. As test results are determined, the ROMs turn green if they're good or red if they're bad.

  The LED display signals a bad ROM with an error code between 200 and 299 (eg., 2-1-1; see the ROM Summary for codes). Since diagnostics are stored in ROM, the ROM test's accuracy depends on which chip is bad. After replacing suspected chips, always rerun the diagnostics. (Note: Unlike RAMs, ROMs aren't interchangeable.)

* CMOS-DATA TEST. Checksums are compared. If faults are detected the program attempts to correct them (for example, by restoring factory settings to substitute for lost data). If it can't, the game won't operate and you'll have to run the CMOS-RAM test. Screen indications are explained in the text under CMOS-RAM Test.

DIAGNOSTIC-MODE TESTS

* RAM AND ROM TESTS... These tests are repeated, only the ROM test is performed first. Refer to Screen-RAM Test, Additional RAM Tests, and ROM Test above.

* CMOS-RAM TEST. A chip error is displayed on the CRT and the LED readout on the CPU board. THE CMOS RAM (U59) is on the CPU board. If this chip is bad, an error code 359 appears on the LED readout.

When the CMOS RAM fails the test (or a memory-protect failure occurs), FACTORY SETTINGS RESTORED appears on the CRT. Meanwhile the LED display signals 300. In this case, BOOKKEEPING TOTALS reset to zero.

However CMOS itself isn't always the cause of such problems. For example, a game without battery power reverts to factory settings. Whenever factory settings are restored, your custom settings are lost and must be reentered.

If the game always comes on with the display FACTORY SETTINGS RESTORED, troubleshoot the game: With power OFF, check for a minimum of 3.5VDC at pin 18 of the CMOS RAM, chip U59 on your CPU Board.

1. Less than 3.5VDC. Replace the three AA alkaline cells.
2. No voltage. Matching polarity, replace diode D2 (type 1N4148) on your CPU Board. Now recheck the voltage at pin 18 of chip U59.
3. Voltage is present. Test the memory-protect switch on the coin door and the wiring to the CPU board. Check memory-protect gates 5F, 6D, 6E, 7E and transistor Q2.
   A. You should have a pulsing signal at pin 10 of U59 when the coin door is open.
   B. You should see a long pulse (inverted reset-pulse) at pin 8 of U59 when you first switch on the game. This pulse holds pin 8 high for about a second.
   C. The long pulse should then be followed by a continuously-pulsing signal.

* SOUND TEST. One by one, sound lines 1 through 6 are pulsed. When a sound line is pulsed, its number is shown on the CRT. You should hear a separate sound for each sound line. If a sound is missing, its corresponding line is stuck high or stuck low. If two lines produce the same sound, they're shorted together.

Use AUTO-UP to cycle through all the sounds. With MANUAL-DOWN, you'll continuously test one sound-line.

* SWITCH TEST. The name of the switch is highlighted when that switch is closed. Alternately close each of your game's switches. The names of open switches won't appear on the screen. Stuck switches appear constantly.

Remember, I-O port problems can mimic bad switches. Cables, buffers or a PIA may be involved. If the problem isn't the switch or wiring, check the CPU board near PIAs IC5 and IC6. Buffers (ICs 43, 44, 45 and 46) are more likely to be at fault than a PIA.

1. Trace the switch line on your CPU-board schematic and check the appropriate buffer.
2. Press or ground the switch in question.
3. Does a low appear on the input of the buffer?
4. Does a high appear at the output? Other signals indicate a bad part.
5. Does the buffer have +5V at pin 1?
6. Is the PIA's input pin following the signal at the buffer's output?

To exit the Switch Test you must hold ADVANCE down until the next screen appears.

* THE CROSSHATCH PATTERN aids the technician in converging the monitor.

* THE PURITY SCREENS (solid red, green and blue screens) are intended for monitor adjustments and for checking the color RAMs (ICs 75 through 78 on the video board). If these screens show contaminated colors, degauss the monitor and adjust the purity magnets. If colors are missing, one of your color RAMs may be bad.

A purity screen with vertical lines through it also signals a color-RAM error. (Please don't confuse the purity screens with the crosshatch pattern or color-bars pattern. These last two patterns are supposed to have vertical lines!)

THE COLOR BARS are intended for monitor adjustments and for checking the color RAMS. The bars serve as a color and brightness reference when you adjust the color drives and cutoffs, screen and black-level controls.

If colors are missing or the wrong colors are displayed, you may have a bad color RAM. From the left side of the CRT, here are the colors you should see: red, green, blue, black, white, yellow, cyan and magenta.

Sound Self-Test

1. NO SOUND IN DIAGNOSTIC-MODE TEST: Check the sound-select inputs (pins 2 through 9 of IC 4) on the CPU board for pulsing during the test. Also check for shorts between sound lines.

2. STILL NO SOUND: Turn the volume control all the way up. With the game turned on, momentarily place a powered-up AC soldering-pencil on the center tap of the volume control. DO NOT use a soldering iron of over 40 watts. Cordless models will NOT work here.

   A. If you hear a low hum, the power-amplifier chip (TDA2002A), volume control and speaker are okay.

   B. If you don't hear a hum, try the test again with the volume control turned halfway up.

3. GARBLED SOUNDS: One at a time, replace microprocessor IC 27 and sound ROM IC 8 on the CPU board.

4. THE SOUND DIAGNOSTIC BUTTON on the CPU board isn't used in this game. If you accidentally press this button, game sounds will be disabled until you turn the game off and on again.

A Word About Troubleshooting

WILLIAMS PROVIDES EXTENSIVE DIAGNOSTICS in the games it manufactures. These can be a dramatic timesaver in your servicing work. Familiarity with the service literature can also enhance troubleshooting. In the few instances when you can't find the problem using built-in diagnostics, these rules of thumb should help...

1. GIVE YOUR GAME A VISUAL INSPECTION in the suspected area. Bad connections are common in older games. Are the plug-in chips firmly seated in their sockets? Are connectors securely attached?

2. THINK OVER THE SYMPTOMS and then jot them down. Keeping notes pins down the details of your problem and prevents wasted time going over the same tests.

3. YOUR ANALYSIS SHOULD REVEAL which tools you need: Multimeter (analog or digital), logic probe, oscilloscope or other diagnostic equipment. Gather your tools.

4. CHECK YOUR VOLTAGES. Check regulated and unregulated DC voltages first at the output of the power supply. If any DC voltage is missing check your AC voltage at the fuse (with reference to its return line to the transformer). Use your Power-Wiring Diagram and Interboard-Wiring Diagram to find the fuse's location.

5. SWAP INTERCHANGEABLE BOARDS and chips that relate to your problem.

6. ONCE YOU'VE ISOLATED THE SUSPECTED CIRCUIT use your logic probe or oscilloscope to test for normal operation.

MAIN-HARNESS COLOR CODE

COLOR	FUNCTION
GREEN-BROWN	switch ground
BLACK	ground
GRAY	+5 volts
GRAY-YELLOW	+12 volts regulated
GRAY-WHITE	+12 volts unregulated
ORANGE	-5 volts
RED-BLACK	speaker +
BLACK-RED	speaker -
RED-ORANGE	MEMORY-PROTECT switch*
WHITE-VIOLET	SLAM-TILT switch**
YELLOW-WHITE	RIGHT-COIN switch
WHITE-BLUE	LEFT-COIN switch
WHITE-GRAY	HIGH-SCORE RESET switch
GREEN	ADVANCE switch
BLUE	AUTO-UP/MANUAL-DOWN switch
ORANGE-BLUE	FIRE UP-LEFT P1-joystick switch
ORANGE-YELLOW	FIRE UP-RIGHT P1-joystick switch
ORANGE-WHITE	MOVE DOWN-LEFT P2-joystick switch
RED-GRAY	MOVE DOWN-RIGHT P2-joystick switch
RED-BROWN	MOVE UP-LEFT P2-joystick switch
ORANGE-GRAY	MOVE UP-RIGHT P2-joystick switch
ORANGE-BROWN	MOVE DOWN-LEFT P1-joystick switch
ORANGE	MOVE DOWN-RIGHT P1-joystick switch
ORANGE-RED	MOVE UP-LEFT P1-joystick switch
ORANGE-BLACK	MOVE UP-RIGHT P1-joystick switch
YELLOW-BLUE	2-PLAYER START switch
YELLOW-GREEN	1-PLAYER START switch
RED-WHITE	FIRE DOWN-LEFT P2-joystick switch
RED-GREEN	FIRE DOWN-RIGHT P2-joystick switch
RED-YELLOW	FIRE UP-LEFT P2-joystick switch
RED	FIRE UP-RIGHT P2-joystick switch
ORANGE-GREEN	FIRE DOWN-LEFT P1-joystick switch
ORANGE-VIOLET	FIRE DOWN-RIGHT P1-joystick switch

SHIELDED VIDEO-CABLE

RED	video red
BROWN	video blue
GREEN	video green
BLACK	video-sync vertical
WHITE	video-sync horizontal
SHIELD	video ground

SHIELDED VOLUME-CABLE

RED	positive
BLACK	negative
SHIELD	ground

PARTS LIST

31-1143-3020-U	INFERNO CONTROL PANEL OVERLAY
31-1144-3020-U	INFERNO MARQUEE
31-1145-3020-U	INFERNO CRT COVER
D-9444	POWER SUPPLY ASSY/SYS.6
D-9869	INFERNO CPU SUB-ASSY.
D-10556	INFERNO VIDEO SUB-ASSY.
D-11-737	SPEAKER PANEL SUB-ASSY.
A-5610-10252-00	TRANSFORMER W/LEADS
C-9892	PWR PACK CHAS ASSY.
C-10576	8 WAY POWER GRIP ASSY.
C-10574	8 WAY POWER GRIP HANDLE ASSY.
5647-10163-00	TRIGGER SWITCH

Warnings & Notices

WARNING

FOR SAFETY AND RELIABILITY, WILLIAMS does not recommend or authorize any substitute parts or modifications of WILLIAMS equipment.

USE OF NON-WILLIAMS PARTS and modifications of game circuitry may adversely affect game play, or may cause injuries.

SUBSTITUTE PARTS OR EQUIPMENT MODIFICATIONS may void FCC type-acceptance.

SINCE THIS GAME IS PROTECTED by Federal copyright, trademark and patent laws, unauthorized game-conversions may be illegal under Federal law.

THIS "CONVERSION" PRINCIPLE ALSO APPLIES to unauthorized facsimiles of WILLIAMS equipment, logos, designs, publications, assemblies and games (or game features not deemed to be in the public domain), whether manufactured with WILLIAMS components or not.

WARNING

THREE-WIRE PLUG. This game must be plugged into a properly-grounded outlet to prevent shock hazard and to assure proper game operation. DO NOT use a "cheater" plug to defeat the ground pin on the power cord, and DO NOT cut off the ground pin.

WARNING

FCC STICKER. Check the back of your game to see that an FCC-certification sticker was attached to your game at the factory.

All games that leave WILLIAMS' plants have been tested and found to comply with FCC Rules. As the sticker is proof of this fact, legal repercussions to the owner and distributor of the game may result if the sticker is missing.

If you receive any WILLIAMS game (manufactured after December 1982) that has no FCC sticker, call WILLIAMS for advice or write us a note on your game-registration card. Be sure the card bears your game's serial number.

RF-INTERFERENCE NOTICE

CABLE-HARNESS PLACEMENT and ground-strap routing on this game have been designed to keep RF radiation and conduction within levels accepted for a class A computing device pursuant to Subpart J of Part 15 of FCC Rules

TO MAINTAIN THESE LEVELS , reposition harnesses and reconnect ground straps to their original placements if they should be disconnected during maintance.

NOTICE

INFERNO is a registered trademark of WILLIAMS ELECTRONICS, INC.

C 1985 WILLIAMS ELECTRONICS, INC.

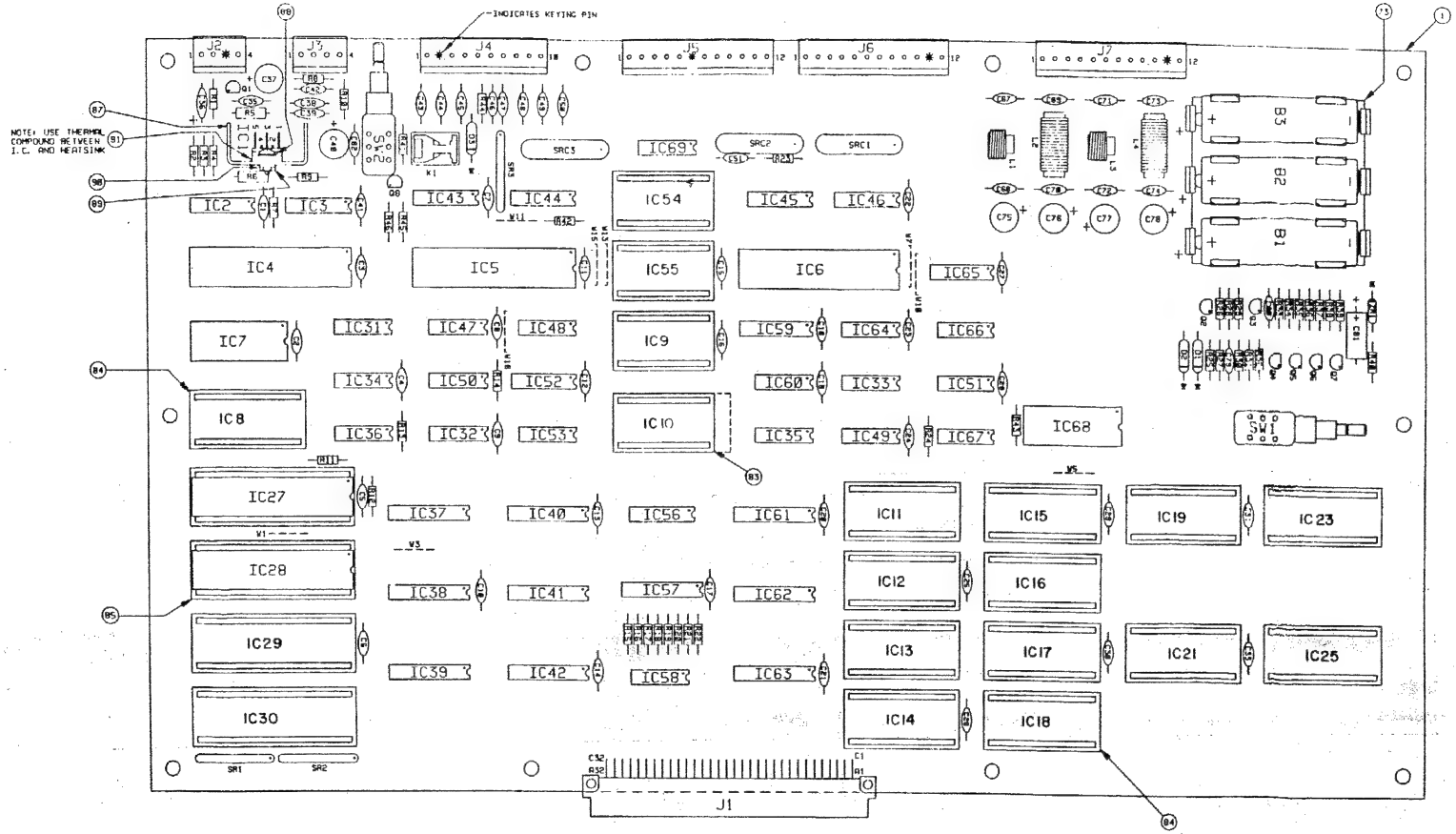

ITEM	PART NUMBER	DESCRIPTION	QTY

ITEM	PART NUMBER	DESCRIPTION	QTY

DO NOT SCALE WORK TO DIMENSIONS SHOWN

REMOVE BURRS - BREAK SHARP EDGES

WILLIAMS ELECTRONICS, INC.

CPU PC BOARD SUB ASSEMBLY

SCALE 1/1

PART NO. D-9869

REV -

6986-a

NOTES:

1. I.C., 74LS244: IC37, IC38, IC39, IC40, IC41, IC42.
2. 1K OHM RESISTOR: R8, R10, R11, R12, R15, R14, R26, R30, R34, R38, R39, R41.
3. 270 OHM RESISTOR: R15, R16, R17, R18, R19, R20, R21, R22.
4. 4.7K OHM RESISTOR: R23, R28, R36, R42.
5. .01 MFD. CAPACITOR: C1, C2, C3, C4, C5, C6, C7, C8, C9, C10, C11, C12, C13, C14, C15, C16, C17, C18, C19, C20, C21, C22, C23, C24, C25, C26, C27, C28, C29, C30, C31, C33, C35, C79, C80, C82.
6. .001 MFD. CAPACITOR: C42, C43, C44, C45, C46, C47, C48, C49, C50, C70, C71, C72, C73, C74, C67, C68, C69.
7. 0-OHM RESISTOR: W1, W3, W5, W7, W10, W11, W13, W15, W18.
8. USE THERMAL COMPOUND BETWEEN IC1 AND HEATSINK.
9. JUMPER W11 IS TO BE CUT FOR COCKTAIL GAMES.
10. FOR SCHEMATIC REFER TO DWG. #16-8875.

ITEM	PART NO.	PART DESIGNATION	DESCRIPTION	QTY.
96				
95				
94				
93	5010-09534-00	SEE NOTE #7	RESISTOR, C.F., 0 OHM	9
92				
91	20-9229		THERMAL COMPOUND	A.R.
90	4705-00007-00		#6 EXT. LOCKWASHER	1
89	4406-01117-00		6-32 HEX NUT	1
88	4006-01003-06		6-32 X 3/8 P-PH-S	1
87	5705-09199-00		HEATSINK THERMALLOY #6030	1
86				
85	5700-00905-00		40-PIN I.C. SOCKET	4
84	5700-10176-00		28-PIN I.C. SOCKET	13
83	5700-09004-00		24-PIN I.C. SOCKET	4
82				
81	5791-09043-00	1J5, 1J6, 1J7	12-PIN HEADER 09-65-1121	3
80	5791-09444-00	1J4	10-PIN HEADER 09-65-1101	1
79	5791-09028-00	1J2, 1J3	4-PIN HEADER 09-65-1041	2
78	5791-10027-00	1J1	64-PIN R.N. HEADER (MALE)	1
77				
76	5641-09312-00	SW1, SW2	PUSH BUTTON SWITCH, DPDT MOMENTARY	2
75	5641-09371-00		PUSH BUTTON SWITCH, SPST	0
74				
73	5081-09021-00		BATTERYHOLDER #171	1
72	5800-09022-00	B1, B2, B3	BATTERY, ALKALINE 1.5V (AA)	3
71				
70	5551-10161-00	L1, L3	COIL, RADIAL, 2.0 µH, 3 A.	2
69	5551-09822-00	L2, L4	COIL, RADIAL, 4.7 µH, 3 A.	2
68				
67				
66	5060-10396-00	SRC1, SRC2, SRC3	SIP, 4.7K OHM 8 470 MFD. 8ABC 10-PIN	3
65	5019-09362-00	SR1, SR2, SR3	SIP, 4.7K OHM 9R 10-PIN 5%	3

ITEM	PART NO.	PART DESIGNATION	DESCRIPTION	QTY.
64				
63	5075-03018-00	ZR1	ZENER DIODE, 1N5936A, 6.8V	1
62	5070-06258-00	D2	DIODE, SILICON, 1N4001	1
61	5070-09266-00	D1	DIODE, SILICON, 1N5817	1
60				
59	5190-10270-00	Q5	TRANSISTOR, 2N5906 PNP TO-92	1
58	5160-10269-00	Q1, Q2, Q4, Q5, Q6, Q7	TRANSISTOR, 2N5904 NPN TO-92	6
57				
56	5043-09865-00	C51	CAPACITOR, AXIAL, 470 PFD. 50V +/-20%	1
55	5040-09545-00	C81	CAPACITOR, AXIAL, 22 MFD. 10V +/-20%	1
54	5043-09845-00	SEE NOTE #6	CAPACITOR, AXIAL, .001 MFD. 50V	17
53	5043-09844-00	C41	CAPACITOR, AXIAL, 47 PFD. 50V +/-20%	1
52	5040-09421-00	C40, C75, C76, C77, C78	CAPACITOR, ELECT. RAD. 100 MFD. 25V +50-10%	5
51	5043-09896-00	C38, C39	CAPACITOR, CERAMIC, .1 MFD. 50V +/-20%	2
50	5040-09776-00	C37	CAPACITOR, RADIAL, 470 MFD. 16V +50-10%	1
49	5041-09243-00	C36	CAPACITOR, 10 MFD. 10V +/-10%	1
48	5043-08988-00	SEE NOTE #5	CAPACITOR, CERAMIC, .01 MFD. 50V +80-20%	36
47				
46	5010-09039-00	R37	RESISTOR, C.F., 10 OHM 5% 1/4 WATT	1
45	5010-09001-00	R43	RESISTOR, C.F., 330 OHM 5% 1/4 WATT	1
44	5010-09160-00	R33, R35	RESISTOR, C.F., 220 OHM 5% 1/4 WATT	2
43	5010-10005-00	R31, R32	RESISTOR, C.F., 390 OHM 5% 1/4 WATT	2
42	5010-10170-00	R29	RESISTOR, C.F., 47 OHM 5% 1/4 WATT	1
41	5010-10171-00	R27	RESISTOR, C.F., 56 OHM 5% 1/4 WATT	1
40	5010-09034-00	R25, R40	RESISTOR, C.F., 10K OHM 5% 1/4 WATT	2
39	5010-09416-00	R24	RESISTOR, C.F., 470 OHM 5% 1/4 WATT	1
38	5010-00991-00	SEE NOTE #4	RESISTOR, C.F., 4.7K OHM 5% 1/4 WATT	4
37	5010-09224-00	SEE NOTE #3	RESISTOR, C.F., 270 OHM 5% 1/4 WATT	8
36	5010-09161-00	R9	RESISTOR, C.F., 2.2 OHM 5% 1/4 WATT	1
35	5010-09358-00	SEE NOTE #2	RESISTOR, C.F., 1K OHM 5% 1/4 WATT	12
34	5010-09361-00	R6	RESISTOR, C.F., 220 OHM 5% 1/2 WATT	1
33	5010-09181-00	R5	RESISTOR, C.F., 1 OHM 10% 1/2 WATT	1

ITEM	PART NO.	PART DESIGNATION	DESCRIPTION	QTY.
32	5010-09179-00	R4	RESISTOR, C.F., 3.3M OHM 5% 1/4 WATT	1
31	5010-00985-00	R2, R3, R7	RESISTOR, C.F., 3.3K OHM 5% 1/4 WATT	3
30	5010-09363-00	R1	RESISTOR, C.F., 5.6K OHM 5% 1/4 WATT	1
29	5281-09738-00	IC45, IC46	I.C., 74LS157, QUAD 2 TO 1 MULTIPLEXER	2
28	5280-09010-00	IC68	I.C., 74154, 4 TO 16 LINE DEC/DEMULT.	1
27	5280-09309-00	IC67	I.C., 7407, HEX. BUF. OPEN-COLLECTOR	1
26	5281-10014-00	IC66	I.C., 74LS20, DUAL 4-INPUT NAND	1
25	5281-09735-00	IC65	I.C., 74LS161, BINARY COUNTER	1
24	5281-09235-00	IC64	I.C., 74LS10, TRIPLE 3-INPUT NAND GATE	1
23	5281-09308-00	IC61, IC62, IC63	I.C., 74LS245, OCTAL BUS TRANSCEIVER	3
22	5281-09743-00	IC60	I.C., 74LS08, QUAD 2-INPUT AND	1
21	5340-09689-00	IC59	I.C., 5114, 1K X 4 CMOS SRAM 450 NS	1
20	5671-09411-00	IC58	I.C., MAN72A, 7 SEG. LED DISPLAY	1
19	5281-09486-00	IC57	I.C., 74LS374, OCTAL D-TYPE FLIP-FLOP	1
18	5281-10015-00	IC56	I.C., 74LS75, 4-BIT BISTABLE LATCHES	1
17	5281-09247-00	IC55	I.C., 74LS02, QUAD 2-INPUT NOR	1
16	5281-09246-00	IC52	I.C., 74LS139, DUAL 2 TO 4 LINE DECODER	1
15	5280-09551-00	IC50, IC51	I.C., 7425, DUAL 4-INP. NOR GATE/STROBE	2
14	5281-09508-00	IC47, IC48, IC49, IC69	I.C., 74LS32, QUAD 2-INPUT OR	4
13	5310-09975-00	IC43, IC44	I.C., 4049, CMOS, HEX. INVERTER	2
12	5281-09867-00	SEE NOTE #1	I.C., 74LS244, OCTAL BUF. RECEIVER	6
11	5281-09487-00	IC36	I.C., 74LS74, DUAL-D TYPE FLIP-FLOP	1
10	5281-09215-00	IC34, IC35	I.C., 74LS04, HEX. INVERTER	2
9	5281-09499-00	IC31, IC32, IC33	I.C., 74LS00, QUAD 2-INPUT NAND	3
8	5400-09490-02	IC28	I.C., 6809E, MICROPROCESSOR	1
7	5400-09250-00	IC27	I.C., 6808, MPU	1
6	5540-09005-03	IC7	I.C., 6810, RAM	1
5	5430-08972-00	IC4, IC5, IC6	I.C., 6821, PIA	3
4	5281-09745-00	IC3	I.C., 74LS138, 3 TO 8 LINE DECODERS/DEMULT.	1
3	5371-09152-00	IC2	I.C., 1408, D/A CONVERTER	1
2	5370-09156-00	IC1	I.C., TDA 2002A AUDIO AMPLIFIER	1
1	5770-10330-00		BARE P.C. BOARD	1

BILL OF MATERIALS

PARTS LENGTH: MARK LOCATED	DO NOT SCALE WORK TO DIMENSIONS SHOWN	REMOVE BURRS – BREAK SHARP EDGES	WILLIAMS ELECTRONICS, INC.
DRAWN BY: C. GAY 4/17/84		TOLERANCES UNLESS OTHERWISE SPECIFIED	3401 N. CALIFORNIA AVE. CHICAGO IL 60618
CHECKED BY: DATE: PE 5/1/84		FRACTIONAL ±1/64 ANGULAR ±3°	NAME: CPU P.C. BOARD SUB-ASSEMBLY
APPROVAL: DATE: Dave Nutt	FIRST USED ON: D-9769	DECIMAL .XXX ±.005 FILLETS .020 MAX	SCALE: -/- SHT 2 OF 2
QTY: 1		MATERIAL: NONE	PART NO: D-9769 REV: -

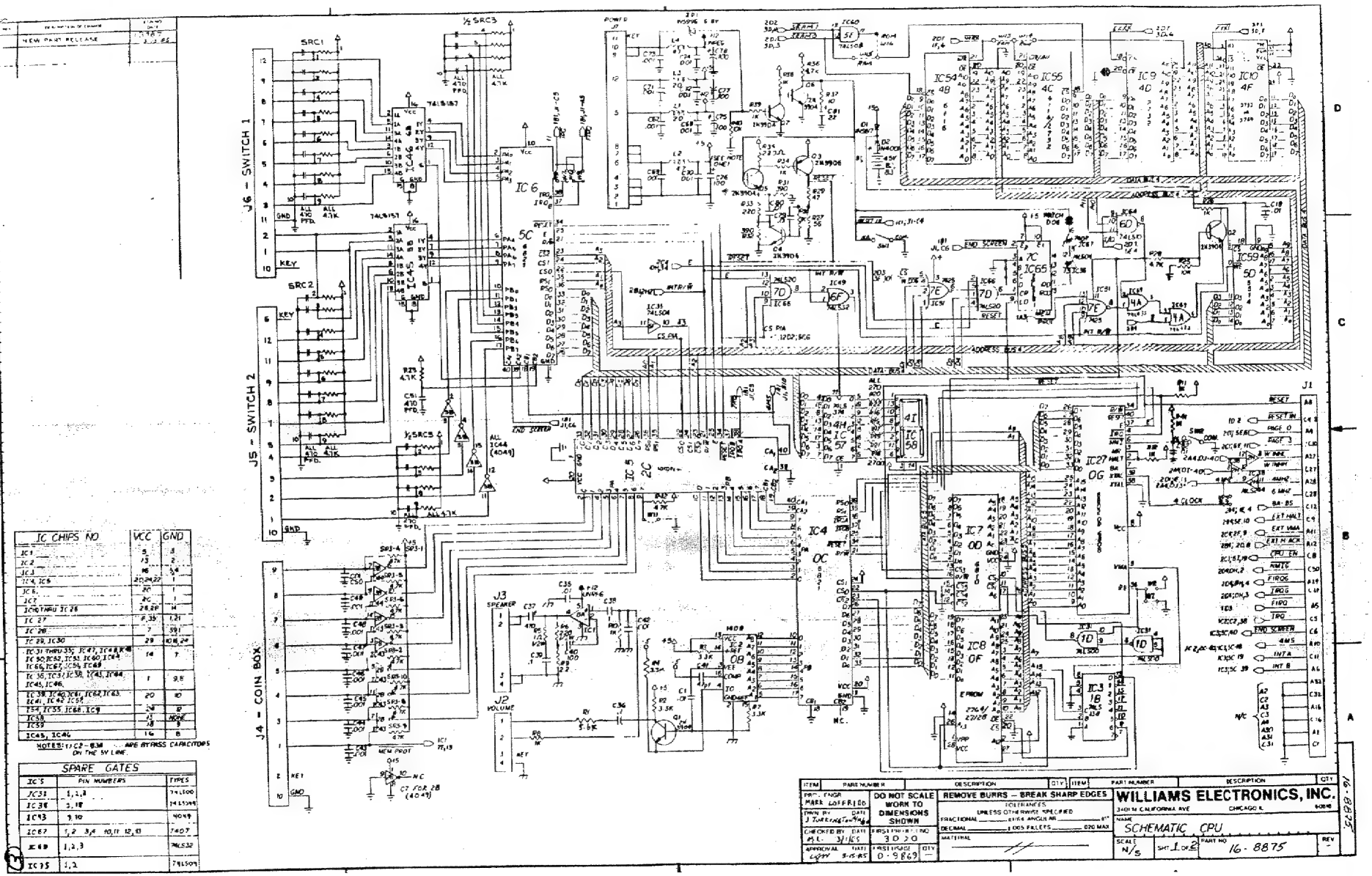

IC CHIPS NO	VCC	GND
IC1	5	8
IC2	16	2
IC3	16	8
IC4, IC5	20,40,22	1
IC6, IC7	20	1
IC8 THRU IC28	28,26	14
IC 27	4,35	1,21
IC 29	7	39,1
IC 29, IC30	28	14,26,29
IC 31 THRU 35, IC 41, IC 44 & IC 50, IC 52, IC 53, IC 60, IC 64, IC 66, IC 67, IC 54, IC 69	14	7
IC 36, IC 51, IC 38, IC 45, IC 46, IC 45, IC 46,	1	9,8
IC 39, IC 40, IC 61, IC 62, IC 63, IC 41, IC 42 IC 59	20	10
IC 55, IC 55, IC 68, IC 9	28	10
IC 58	15	NONE
IC 59	18	9
IC 45, IC 46	16	8

NOTES: 1) C2 - C38 ARE BYPASS CAPACITORS ON THE 5V LINE.

SPARE GATES		
IC'S	PIN NUMBERS	TYPES
IC 33	1, 2, 3	74LS00
IC 36	9, 10	74LS393
IC 43	9, 10	4049
IC 67	1, 2 3, 4 10, 11 12, 13	7407
IC 69	1, 2, 3	74LS32
IC 35	1, 2	74LS04

ITEM	PART NUMBER	DESCRIPTION	QTY
PROJ. ENGR. MARK LOFFREDO	DO NOT SCALE WORK TO DIMENSIONS SHOWN	REMOVE BURRS — BREAK SHARP EDGES	WILLIAMS ELECTRONICS, INC.
DRWN BY J TORRENCE	TOLERANCES UNLESS OTHERWISE SPECIFIED	3401 N CALIFORNIA AVE CHICAGO IL	
CHECKED BY M.L. 3/11/85	FRACTIONAL ± ANGULAR ± DECIMAL .XX ± .005 FILLETS .020 MAX	NAME SCHEMATIC CPU	
APPROVAL LARRY 3-15-85	FIRST ASSY NO. 3020	SCALE N/S	SHT 1 OF 2
	FIRST USAGE D-9869	PART NO 16-8875	REV -
	MATERIAL		

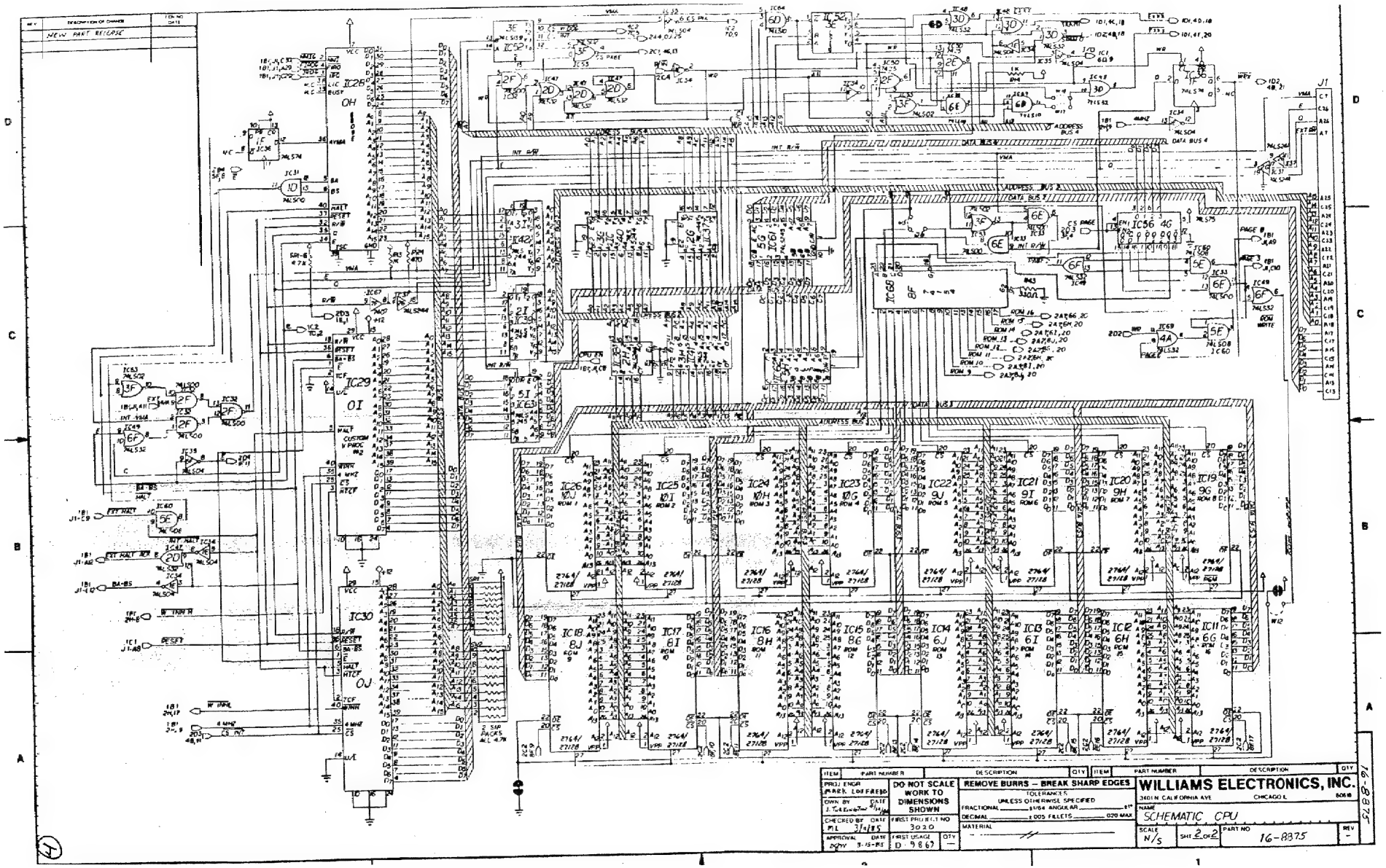
NEW PART RELEASE
IC26
OH
IC29
OI
IC30
OJ
IC56 4G
IC68 8F
IC60
IC63
IC64
IC52
IC42
IC43
IC44
IC45
IC46
IC47
IC48
IC49
IC50
IC51
IC53
IC54
IC55
IC57
IC58
IC59
IC61
IC62
IC65
IC66
IC67
IC69
IC70
IC71
IC72
IC73
IC74
IC75
IC76
IC77
IC78
IC79
IC80
IC81
IC82
IC83
IC84
IC85
IC86
IC87
IC88
IC89
IC90
IC91
IC92
IC93
IC94
IC95
IC96
IC97
IC98
IC99
IC100
IC101
IC102
IC103
IC104
IC105
IC106
IC107
IC108
IC109
IC110
IC111
IC112
IC113
IC114
IC115
IC116
IC117
IC118
IC119
IC120
IC121
IC122
IC123
IC124
IC125
IC126
J1
ADDRESS BUS 2
DATA BUS 2
ADDRESS BUS 4
DATA BUS 4
INT R/W
VMA
RESET
HALT
R/W
4 MHz
2 MHz
E
Q
CS PAGE
PAGE B
ROM WRITE
EXT HALT
EXT HALT RCV
B4-B5
W TRNFR
2 SIO PACKS
2764/27128
74LS00
74LS02
74LS04
74LS08
74LS10
74LS20
74LS30
74LS32
74LS38
74LS42
74LS51
74LS74
74LS86
74LS138
74LS139
74LS157
74LS244
74LS245
74LS257
74LS259
74LS273
74LS374
74LS504
74LS508
74LS532
74LS574
74LS670
74LS688
74LS1010
74LS1034
74LS1040
74LS1042
74LS1048
74LS1049
74LS1050
74LS1051
74LS1052
74LS1053
74LS1054
74LS1055
74LS1056
74LS1057
74LS1058
74LS1059
74LS1060
74LS1061
74LS1062
74LS1063
74LS1064
74LS1065
74LS1066
74LS1067
74LS1068
74LS1069
74LS1070
74LS1071
74LS1072
74LS1073
74LS1074
74LS1075
74LS1076
74LS1077
74LS1078
74LS1079
74LS1080
74LS1081
74LS1082
74LS1083
74LS1084
74LS1085
74LS1086
74LS1087

NEW PART RELEASE

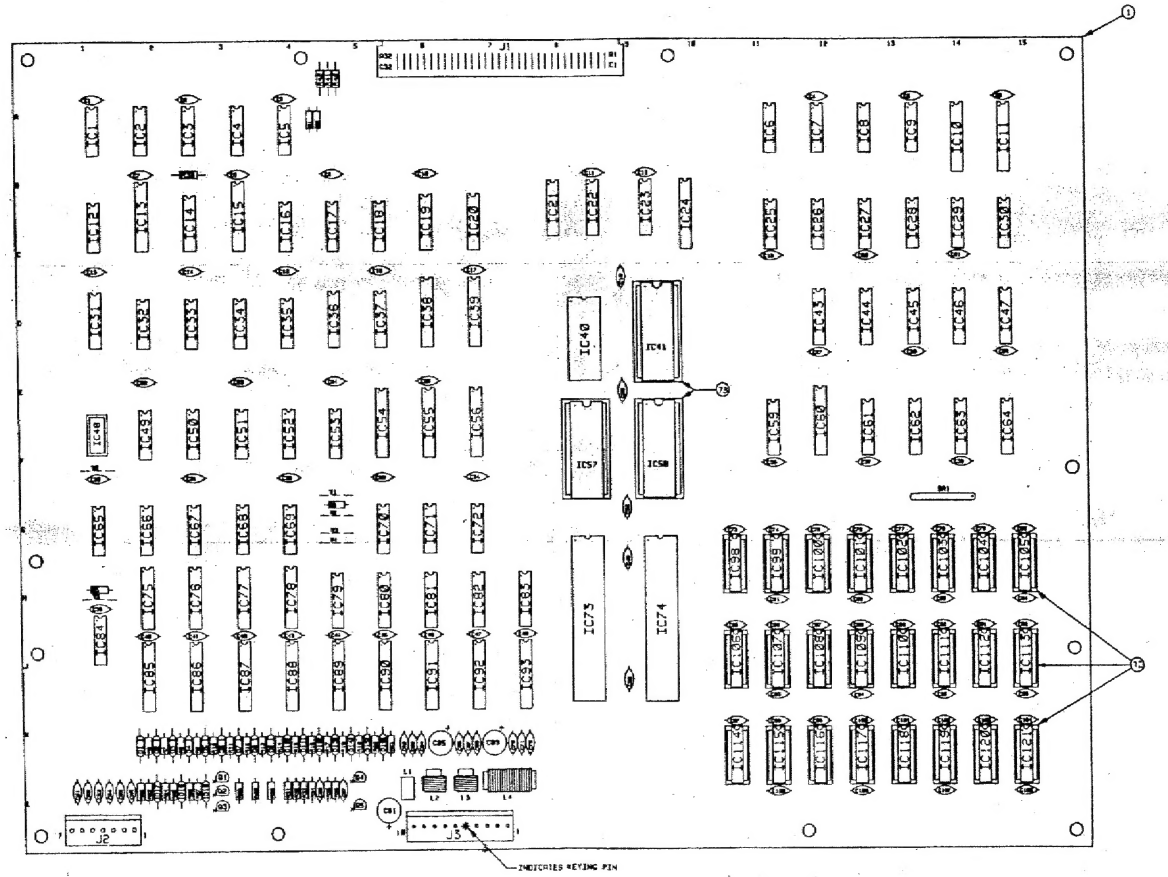

ITEM	PART NUMBER	DESCRIPTION	QTY	ITEM	PART NUMBER	DESCRIPTION	QTY

PROJ ENGR: BARK LOFFELSON
DWN BY: L. GAY DATE: 3-1-85
CHECKED BY: DATE:
APPROVAL: DATE:

DO NOT SCALE WORK TO DIMENSIONS SHOWN

FIRST PROJECT NO: 3020
FIRST PLANE: D-10556
QTY: 1

REMOVE BURRS – BREAK SHARP EDGES

TOLERANCES UNLESS OTHERWISE SPECIFIED
FRACTIONAL ____ LINE ANGULAR ____ 1°
DECIMAL ____ .005 FILLETS ____ .020 MAX

MATERIAL: NONE

WILLIAMS ELECTRONICS, INC.
3401 N. CALIFORNIA AVE. CHICAGO 60618

NAME: VIDEO PC BD. SUB-ASSEMBLY.

SCALE: 2/1 SHT 1 OF 2 PART NO: D-10555 REV

D-10555

5

NOTES:

1. FOR SCHEMATIC, REFER TO DWG. #16-8932.
2. I.C., 74LS86: IC3, IC26, IC27, IC28, IC29, IC33, IC84.
3. I.C., 74LS74: IC6, IC12, IC25, IC50, IC52, IC53.
4. I.C., 74LS374: IC11, IC15, IC38, IC39, IC55, IC56, IC86, IC88, IC89, IC90.
5. I.C., 74LS157: IC21, IC22, IC23, IC79, IC80, IC81, IC82, IC83.
6. I.C., 74LS161: IC31, IC43, IC44, IC45, IC46.
7. I.C., 4116: IC98, IC99, IC100, IC101, IC102, IC103, IC104, IC105, IC106, IC107, IC108, IC109, IC110, IC111, IC112, IC113, IC114, IC115, IC116, IC117, IC118, IC119, IC120, IC121.
8. RESISTOR, 1K OHM: R1, R2, R3, R5, R32, R33.
9. RESISTOR, 2K OHM: R8, R12, R16, R20, R28, R29, R30, R40, R41, R42.
10. CAPACITOR, .01 MFD: C1, C2, C3, C4, C5, C6, C7, C8, C9, C10, C11, C12, C13, C14, C15, C16, C17, C18, C19, C20, C21, C22, C23, C24, C25, C26, C27, C28, C29, C30, C31, C32, C33, C34, C35, C36, C37, C38, C39, C40, C41, C42, C43, C44, C45, C46, C47, C48, C49, C50, C63, C67, C71, C73, C74, C75, C76, C77, C78, C79, C80, C81, C82, C83, C84, C85, C86, C87, C88, C89, C90, C91, C92, C93, C94, C95, C96, C97, C98, C99, C100, C101, C102, C103, C104, C105, C106, C107, C108.
11. CAPACITOR, .001 MFD: C62, C64, C66, C68, C70, C72.
12. DIODE, 1N4148: D1, D2, D3, D4, D5, D6, D7, D8, D9, D10, D11, D12, D13, D14, D15, D16, D17, D18, D19.

ITEM	PART NO.	PART DESIGNATION	DESCRIPTION	QTY.
87				
86				
85				
84				
83				
82				
81				
80				
79				
78				
77				
76				
75				
74				
73	5700-10176-00		28 PIN I.C. SOCKET	3
72	5700-09006-00		16 PIN I.C. SOCKET	24
71				
70				
69	5791-09444-00	J3	10 PIN HEADER 09-65-1101	1
68	5791-09497-00	J2	7 PIN HEADER 09-65-1071	1
67	5792-10026-00	J1	64 PIN R.N. HEADER FEMALE	1
66				
65				
64	5551-09822-00	L4	COIL, RADIAL, 4.7 UH 3 A.	1
63	5551-10161-00	L2, L3	COIL, RADIAL, 2.0 UH 3 A.	2
62	5551-09825-00	L1	COIL, RADIAL, 4.7 UH 30 MA	1
61				
60				
59	5070-00919-00	SEE NOTE #12	DIODE, IN4148 150 MA	19
58				
57	5160-10269-00	Q1, Q2, Q3, Q4, Q5	TRANSISTOR, 2N3904 NPN TO-92	5
56				
55				
54	5043-09845-00	SEE NOTE #11	CAPACITOR, AXIAL, .001 MFD. 50V +/-20%	6
53	5040-09421-00	C61 C65, C69	CAPACITOR, RADIAL, 100 MFD. 25V +50-10%	3
52	5043-00996-00	C68	CAPACITOR, CERAMIC, .1 MFD. 50V +/-20%	1
51	5043-09844-00	C54, C55 C56, C57	CAPACITOR, CERAMIC, 47 PFD. 50V +/-20%	4
50	5043-09865-00	C51, C52, C53	CAPACITOR, CERAMIC, 470 PFD. 50V +/-20%	3
49	5043-00900-00	SEE NOTE #10	CAPACITOR, CERAMIC, .01 MFD. 50V +80-20%	89
48				
47	5019-09869-00	SR1	RESISTOR, C.F., 1K OHM 5% 10 PIN SIP	1
46				
45	5010-09534-00	W2, W4, W5, W6	RESISTOR, 0 OHM	4
44	5010-09541-00	R36	RESISTOR, C.F., 2.7K OHM 2% 1/4 WATT	1
43	5010-10203-00	R35	RESISTOR, C.F., 2.2K OHM 2% 1/4 WATT	1
42	5010-10003-00	R34, R39	RESISTOR, C.F., 390 OHM 5% 1/4 WATT	2
41	5010-10170-00	R23, R25, R27	RESISTOR, C.F., 47 OHM 5% 1/4 WATT	3
40	5010-09508-00	R31	RESISTOR, C.F., 270 OHM 2% 1/4 WATT	1
39	5010-09416-00	R22, R24, R26	RESISTOR, C.F., 470 OHM 5% 1/4 WATT	3
38	5010-10204-00	R9, R13, R17, R21	RESISTOR, C.F., 1K OHM 2% 1/4 WATT	4
37	5010-10205-00	SEE NOTE #9	RESISTOR, C.F., 2K OHM 2% 1/4 WATT	10
36	5010-10000-00	R7, R11, R15, R19	RESISTOR, C.F., 5.9K OHM 5% 1/4 WATT	4
35	5010-09219-00	R6, R10, R14, R18	RESISTOR, C.F., 8.2K OHM 5% 1/4 WATT	4
34	5010-09358-00	SEE NOTE #8	RESISTOR, C.F., 1K OHM 5% 1/4 WATT	6
33				
32				
31	5340-10527-00	SEE NOTE #7	I.C., 4116 RAM/D 16K X 1, 200 NS	24
30				
29	5340-10015-00	IC75, IC76, IC77, IC78	I.C., 2149 RAM/S 1K X 4, 70 NS	8
	5340-10018-00		I.C., 2148 RAM/S 1K X 4, 70 NS	4
28				
27	5410-10315-00	IC73, IC74	I.C., VTI CUSTOM, 32 BIT SHIFT REGISTER	2
26	5280-09481-00	IC61, IC62, IC63, IC64	I.C., 74153, DUAL 4 TO 1 MULTIPLEXER	4
25	A-5282-10293	IC60	I.C., HORZ. DECODE ROM SB	0
	A-5282-10292		I.C., HORZ. DECODE ROM SA	1
24	5281-09308-00	IC54, IC85, IC87	I.C., 74LS245, OCTAL BUS TRANSCEIVER	3
23	5521-10028-00	IC48	I.C., K1116, 12 MHZ OSC 1%	1
22	A-5282-10294	IC47	I.C., HORZ. SYNC. ROM	1
21	5340-10139-00	IC40	I.C., TC5516AP-2 CMOS S RAM 2K X 8 200 NS	0
	5340-09878-00		I.C., 2016 S RAM 2K X 8 200 NS	1
20	5281-09745-00	IC37	I.C., 74LS138, 3 TO 8 DECODER	1
19	5281-09246-00	IC36, IC59	I.C., 74LS139, DUAL 2 TO 4 DEC.	2
18	5281-10014-00	IC34, IC51, IC68	I.C., 74LS20, DUAL 4-INPUT NAND	3
17	5281-09735-00	SEE NOTE #6	I.C., 74LS161, BINARY COUNTER	5
16	5281-09235-00	IC30, IC32, IC35	I.C., 74LS10, TRIPLE 3-INPUT NAND	3
15	5281-09758-00	SEE NOTE #5	I.C., 74LS157, QUAD 2 TO 1 MULTIPLEXER	0
14	5281-09734-00	IC19, IC20	I.C., 74LS283, 4 BIT ADDER	2
13	A-5282-10295	IC14	I.C., CLOCK ROM	1
12	5281-09867-00	IC13, IC24	I.C., 74LS244, OCTAL BUF	2
11	5281-09486-00	SEE NOTE #4	I.C., 74LS374, OCTAL D F/F	10
10	5281-09056-00	IC10, IC91, IC92, IC93	I.C., 74LS373, OCTAL D LATCH	4
9	5281-09247-00	IC9, IC16, IC69 IC71, IC72	I.C., 74LS02, QUAD 2-INPUT NOR	5
8	5281-09499-00	IC8, IC65	I.C., 74LS00, QUAD 2-INPUT NAND	2
7	5281-09487-00	SEE NOTE #3	I.C., 74LS74, DUAL D F/F	6
6	5280-09551-00	IC5	I.C., 7425, DUAL 4-INPUT W/STROBE NOR	1
5	5281-09743-00	IC4, IC7, IC49	I.C., 74LS08, QUAD 2-INPUT AND	3
4	5281-09737-00	SEE NOTE #2	I.C., 74LS86, QUAD 2-INPUT EXOR	7
3	5281-09508-00	IC2, IC17, IC66, IC67	I.C., 74LS32, QUAD 2-INPUT OR	4
2	5281-09215-00	IC1, IC18, IC70	I.C., 74LS04, HEX. INVERTER	3
1	5700-10759-00		BARE P.C. BOARD (REV. -)	1

BILL OF MATERIALS

MARK LOFFREDO	DO NOT SCALE WORK TO DIMENSIONS SHOWN	REMOVE BURRS - BREAK SHARP EDGES	WILLIAMS ELECTRONICS, INC.
DWN BY DATE R. GAY 10/9/84		TOLERANCES UNLESS OTHERWISE SPECIFIED FRACTIONAL ±1/64 ANGULAR ±1° DECIMAL .XXX ±.005 .XX ±.01	3401 N. CALIFORNIA AVE CHICAGO IL 60618
CHECKED BY DATE	ENGINEERING NO 3020		NAME VIDEO P.C. BOARD SUB-ASSEMBLY
APPROVAL DATE	INSTRUCTIONS D-10556	QTY 1	MATERIAL NONE
			SCALE 1.2/1 SHT 2 OF 2 PART NO D-10555 REV -

D-10555

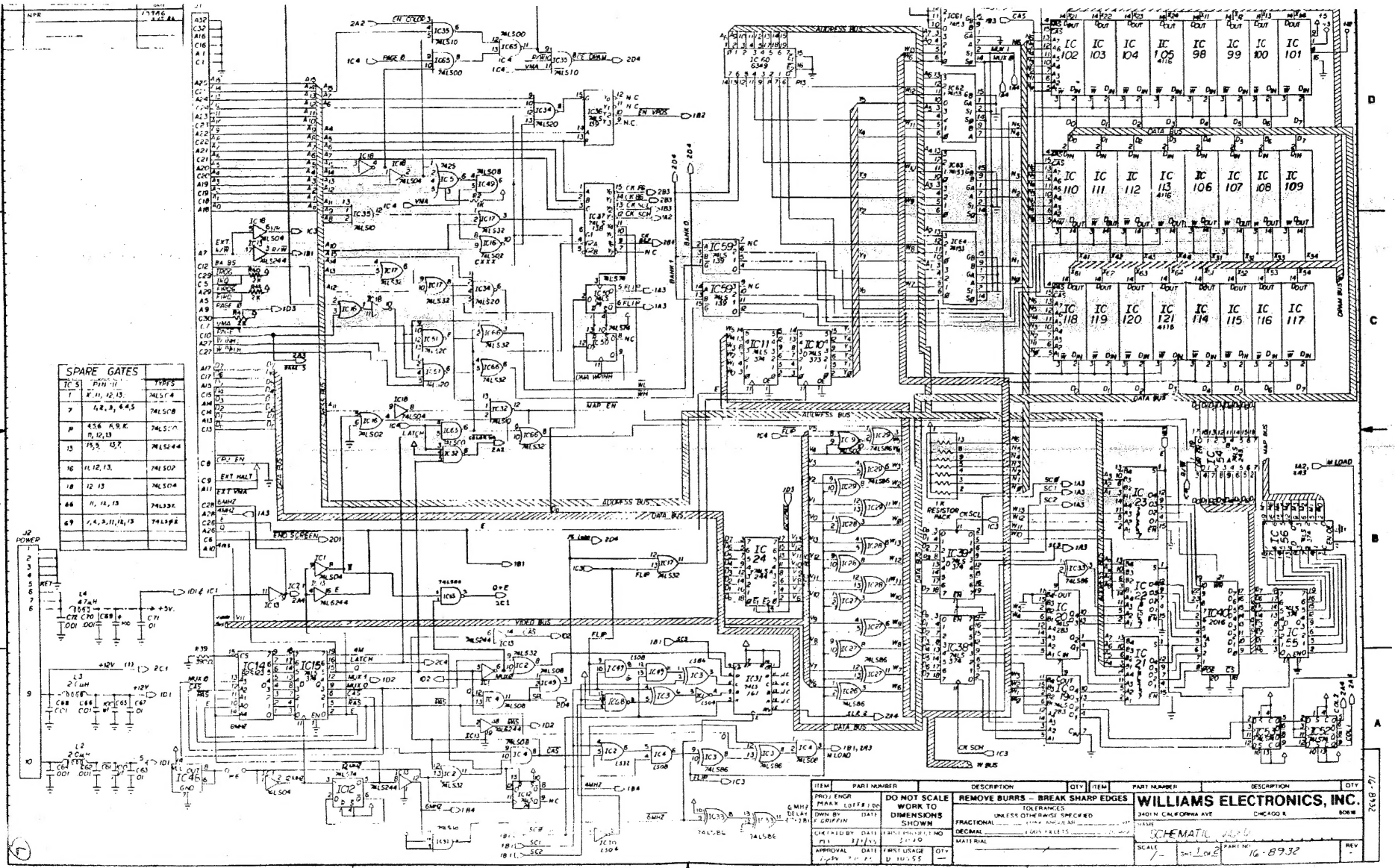

SPARE GATES
IC S
PIN #
TYPES
7
8, 11, 12, 13
74LS04
7
1, 2, 3, 6, 4, 5
74LS08
8
4, 5, 6, 8, 9, 10, 11, 12, 13
74LS00
13
15, 5, 13, 7
74LS244
16
11, 12, 13
74LS02
18
12, 13
74LS04
66
11, 12, 13
74LS32
69
1, 2, 3, 11, 12, 13
74LS02
J2 POWER
ADDRESS BUS
DATA BUS
VIDEO BUS
MAP BUS
DRAM BUS
RESISTOR PACK
END SCREEN
EXT HALT
EXT VMA
+5V
+12V
ITEM
PART NUMBER
DESCRIPTION
QTY
PROJ ENGR
DWN BY
DATE
CHECKED BY
DATE
APPROVAL
DATE
DO NOT SCALE
WORK TO
DIMENSIONS
SHOWN
FIRST USAGE
QTY
REMOVE BURRS – BREAK SHARP EDGES
TOLERANCES
UNLESS OTHERWISE SPECIFIED
FRACTIONAL
DECIMAL
MATERIAL
WILLIAMS ELECTRONICS, INC.
3401 N. CALIFORNIA AVE
CHICAGO IL
SCHEMATIC
SCALE
SHT 1 OF 2
PART NO
16-8932
REV
16-8932

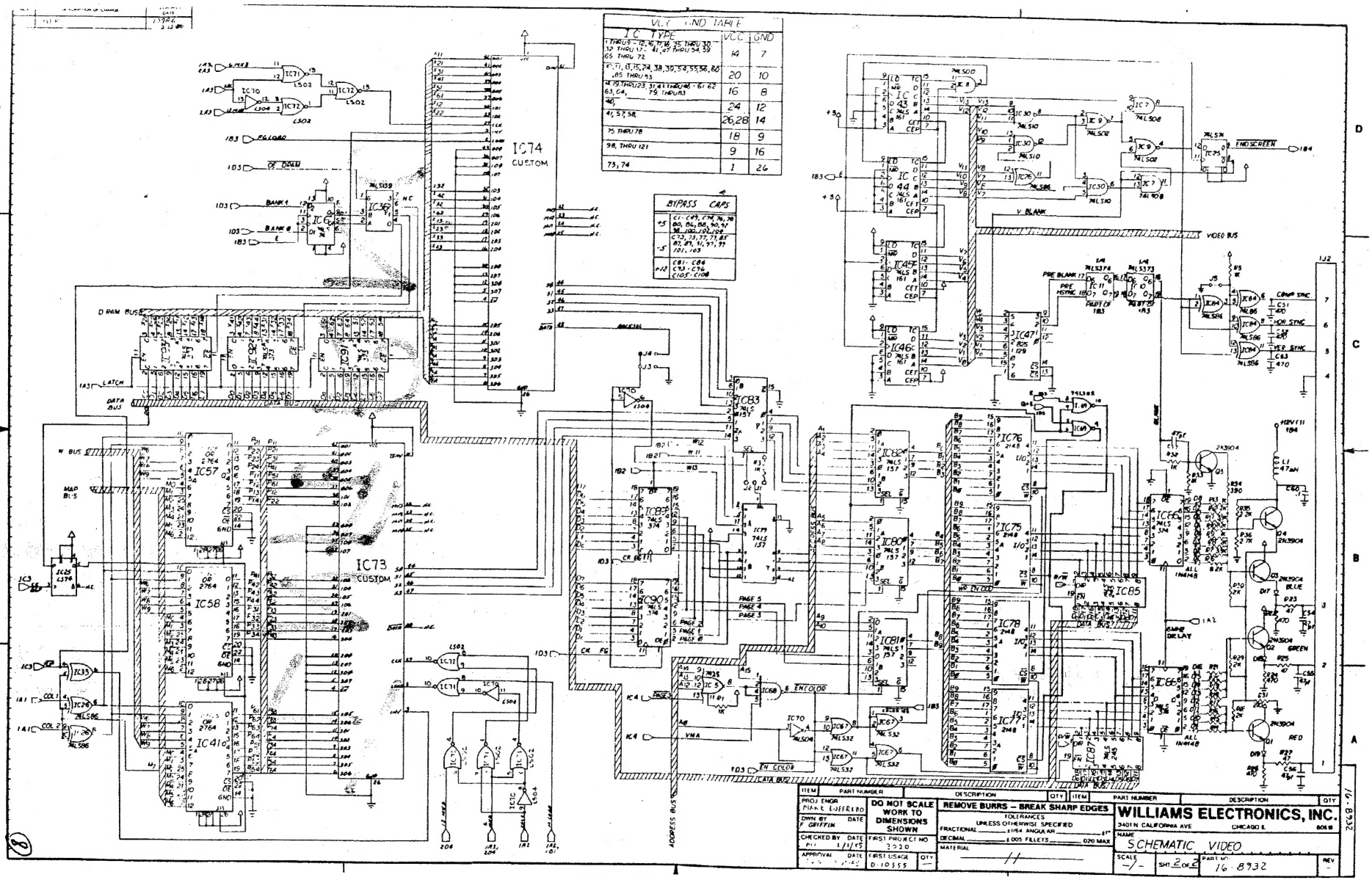
VCC GND TABLE
IC TYPE | VCC | GND
BYPASS CAPS
IC74 CUSTOM
IC73 CUSTOM
IC57
IC58
IC41
IC83
IC84
IC85
IC86
IC87
IC88
IC89
IC90
IC91
IC76
IC75
IC80
IC81
IC78
IC79
IC46
IC47
IC48
IC49
IC50
IC51
IC52
IC53
IC54
IC55
IC56
IC60
IC61
IC62
IC63
IC64
IC65
IC66
IC67
IC68
IC69
IC70
IC71
IC72
IC10
IC11
IC12
IC13
IC14
IC15
IC16
IC17
IC18
IC19
IC20
IC21
IC22
IC23
IC24
IC25
IC26
IC27
IC28
IC29
IC30
IC31
IC32
IC33
IC34
IC35
IC36
IC37
IC38
IC39
IC40
IC42
IC43
IC44
IC45
D RAM BUS
DATA BUS
ADDRESS BUS
VIDEO BUS
W BUS
MAP BUS
V BLANK
H BLANK
ENCOLOR
EN COLOR
LATCH
BANK 0
BANK 1
OE DRAM
PG LOAD
COMP SYNC
HOR SYNC
VER SYNC
PRE BLANK
PRE HSYNC
RAMP DELAY
END SCREEN
WILLIAMS ELECTRONICS, INC.
3401 N. CALIFORNIA AVE. CHICAGO IL 60618
SCHEMATIC VIDEO
16-8932
SHT 2 OF 2
REMOVE BURRS – BREAK SHARP EDGES
DO NOT SCALE WORK TO DIMENSIONS SHOWN
PROJ ENGR MIKE LOFFREDO
DWN BY F. GRIFFIN
CHECKED BY
APPROVAL
FIRST PROJECT NO 2920
FIRST USAGE D-10555